Product data sheet (PDF)

Widespread Faucet

Description

- Lever handle
- Solid brass construction
- Includes pop-up assembly
- 90-degree ceramic valve set
- 1#2" connections for easy installation
- ADA compliant

Finishes	Art. no.	Price excl. VAT
chrome	06117000	444,00 $
oil rubbed bronze	06117620	634,00 $
brushed nickel	06117820	634,00 $
rubbed bronze	06117920	634,00 $

Product image
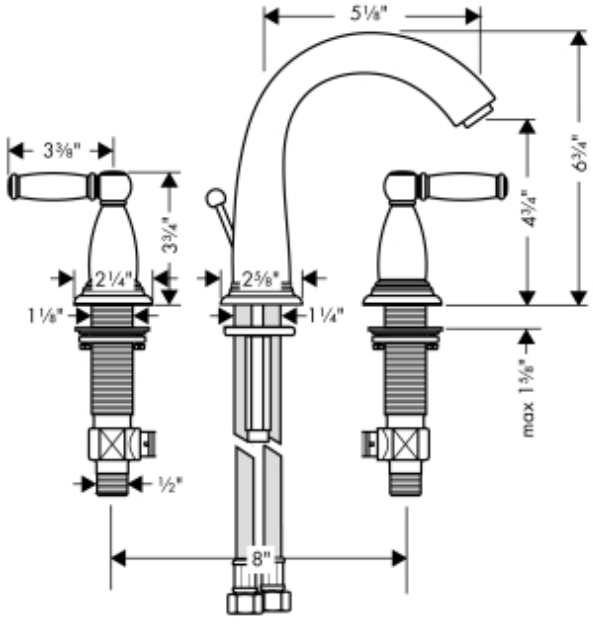
Scale drawing